OM-1534 045 215G

August 1998

Processes

Flux Cored (FCAW) Welding

Description

Wire Feeder

S-44GL

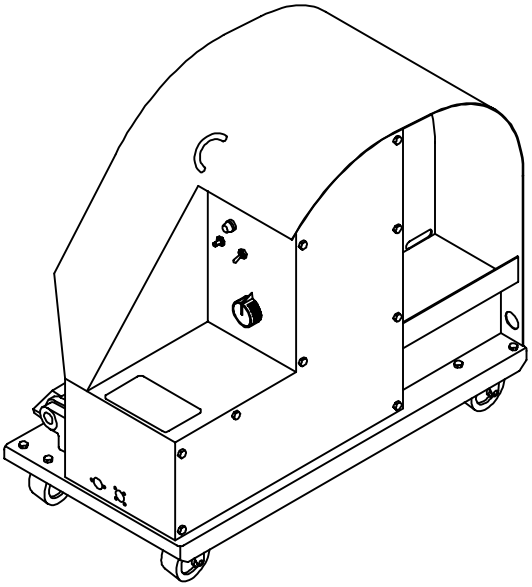

OWNER'S MANUAL

Visit our website at

www.MillerWelds.com

From Miller to You

Thank you and *congratulations* on choosing Miller. Now you can get the job done and get it done right. We know you don't have time to do it any other way.

That's why when Niels Miller first started building arc welders in 1929, he made sure his products offered long-lasting value and superior quality. Like you, his customers couldn't afford anything less. Miller products had to be more than the best they could be. They had to be the best you could buy.

Today, the people that build and sell Miller products continue the tradition. They're just as committed to providing equipment and service that meets the high standards of quality and value established in 1929.

This Owner's Manual is designed to help you get the most out of your Miller products. Please take time to read the Safety precautions. They will help you protect yourself against potential hazards on the worksite. We've made installation and operation quick and easy. With Miller you can count on years of reliable service with proper maintenance. And if for some reason the unit needs repair, there's a Troubleshooting section that will help you figure out what the problem is. The parts list will then help you to decide which exact part you may need to fix the problem. Warranty and service information for your particular model are also provided.

ISO 9001 REGISTERED QUALITY SYSTEM

Miller is the first welding equipment manufacturer in the U.S.A. to be registered to the ISO 9001 Quality System Standard.

TRUE BLUE® WARRANTY

Working as hard as you do – every power source from Miller is backed by the most hassle-free warranty in the business.

Miller offers a Technical Manual which provides more detailed service and parts information for your unit. To obtain a Technical Manual, contact your local distributor. Your distributor can also supply you with Welding Process Manuals such as SMAW, GTAW, GMAW, and GMAW-P.

Miller Electric manufactures a full line of welders and welding related equipment. For information on other quality Miller products, contact your local Miller distributor to receive the latest full line catalog or individual catalog sheets. **To locate your nearest distributor or service agency call 1-800-4-A-Miller, or visit us at www.MillerWelds.com on the web.**

Miller
The Power of Blue.

TABLE OF CONTENTS

Section No. Page No.

SECTION 1 – SAFETY RULES FOR OPERATION OF ARC WELDING POWER SOURCE

1-1. Introduction 1
1-2. General Precautions 1
1-3. Arc Welding 4
1-4. Standards Booklet Index 5

SECTION 2 – SAFETY PRECAUTIONS AND SIGNAL WORDS

2-1. General Information And Safety 6
2-2. Safety Alert Symbol And Signal Words 6

SECTION 3 – SPECIFICATIONS

3-1. Description 7

SECTION 4 – INSTALLATION OR RELOCATION

4-1. Location 7
4-2. Drive Motor Vent Screw 7
4-3. Wire Guide And Drive Roll Installation 8
4-4. Welding Gun Connections 8
4-5. Voltage Sensing Lead Connection 9
4-6. Shielding Gas Connection (Models With Optional Gas Valve) 9
4-7. 115 Volts AC Connection (Models With Optional Gas Valve) 9
4-8. Welding Power Source/Wire Feeder Weld Cable Connections 9
4-9. Welding Wire Installation 10
4-10. Welding Wire Threading 10

SECTION 5 – OPERATOR CONTROLS

5-1. Arc Length Control 11
5-2. Jog Button 12
5-3. Polarity Switch 12
5-4. Optional Voltmeter 12
5-5. Optional Remote Jog Switch 12

SECTION 6 – SEQUENCE OF OPERATION

6-1. Flux Core Arc Welding (FCAW) And Gas Metal Arc Welding (GMAW) . . . 13
6-2. Shutting Down 13

SECTION 7 – MAINTENANCE & TROUBLESHOOTING

7-1. Routine Maintenance 14
7-2. Aligning Motor Gear And Drive Gears 14
7-3. Reinstallation Of Hub Assembly 15
7-4. Overload Protection 15

7-5. Brush Inspection And Replacement 16
7-6. Troubleshooting 17

SECTION 8 – ELECTRICAL DIAGRAMS

Diagram 8-1. Circuit Diagram 18

Section No. Page No.

SECTION 9 – PARTS LIST

Figure 9-1. Main Assembly 20
Optional Equipment 22
Figure 9-2. Switch, Magnetic Blowout 23
Figure 9-3. Wire Drive & Gears 24

LIST OF CHARTS AND TABLES

Table 3-1. Specifications 7
Table 5-1. Arc Voltage Wire Speed 12
Table 7-1. Maintenance Schedule 14
Table 7-2. Troubleshooting 17
Table 9-1. Drive Roll & Wire Guide Kits 25

SECTION 1 – SAFETY RULES FOR OPERATION OF ARC WELDING POWER SOURCE

1-1. INTRODUCTION

We learn by experience. Learning safety through personal experience, like a child touching a hot stove is harmful, wasteful, and unwise. Let the experience of others teach you.

Safe practices developed from experience in the use of welding and cutting are described in this manual. Research, development, and field experience have evolved reliable equipment and safe installation, operation, and servicing practices. Accidents occur when equipment is improperly used or maintained. The reason for the safe practices may not always be given. Some are based on common sense, others may require technical volumes to explain. It is wiser to follow the rules.

Read and understand these safe practices before attempting to install, operate, or service the equipment. Comply with these procedures as applicable to the particular equipment used and their instruction manuals, for personal safety and for the safety of others.

Failure to observe these safe practices may cause serious injury or death. When safety becomes a habit, the equipment can be used with confidence.

These safe practices are divided into two Sections: 1-General Precautions, common to arc welding and cutting; and 2-Arc Welding (and Cutting) (only).

Reference standards: Published Standards on safety are also available for additional and more complete procedures than those given in this manual. They are listed in the Standards Index in this manual. ANSI Z49.1 is the most complete.

The National Electrical Code, Occupational Safety and Health Administration, local industrial codes, and local inspection requirements also provide a basis for equipment installation, use, and service.

1-2. GENERAL PRECAUTIONS

Different arc welding processes, electrode alloys, and fluxes can produce different fumes, gases, and radiation levels. In addition to the information in this manual, be sure to consult flux and electrode manufacturers Material Safety Data Sheets (MSDSs) for specific technical data and precautionary measures concerning their material.

A. Burn Prevention

Wear protective clothing-gauntlet gloves designed for use in welding, hat, and high safety-toe shoes. Button shirt collar and pocket flaps, and wear cuffless trousers to avoid entry of sparks and slag.

Wear helmet with safety goggles and glasses with side shields underneath, appropriate filter lenses or plates (protected by clear cover glass). This is a MUST for welding or cutting, (and chipping) to protect the eyes from radiant energy and flying metal. Replace cover glass when broken, pitted, or spattered. See 1-3A.2.

Avoid oily or greasy clothing. A spark may ignite them.

Hot metal such as electrode stubs and workpieces should never be handled without gloves.

Medical first aid and eye treatment. First aid facilities and a qualified first aid person should be available for each shift unless medical facilities are close by for immediate treatment of flash burns of the eyes and skin burns.

Ear plugs should be worn when working on overhead or in a confined space. A hard hat should be worn when others work overhead.

Flammable hair preparations should not be used by persons intending to weld or cut.

B. Toxic Fume Prevention

Severe discomfort, illness or death can result from fumes, vapors, heat, or oxygen enrichment or depletion that welding (or cutting) may produce. Prevent them with adequate ventilation as described in ANSI Standard Z49.1 listed in Standards Index. NEVER ventilate with oxygen.

Lead -, cadmium -, zinc -, mercury -, and beryllium-bearing and similar materials, when welded (or cut) may produce harmful concentrations of toxic fumes. Adequate local exhaust ventilation must be used, or each person in the area as well as the operator must wear an air-supplied respirator. For beryllium, both must be used.

Metals coated with or containing materials that emit toxic fumes should not be heated unless coating is removed from the work surface, the area is well ventilated and, if necessary, while wearing an air-supplied respirator.

Work in a confined space only while it is being ventilated and, if necessary, while wearing an air-supplied respirator.

Gas leaks in a confined space should be avoided. Leaked gas in large quantities can change oxygen concentration dangerously. Do not bring gas cylinders into a confined space.

Leaving confined space, shut OFF gas supply at source to prevent possible accumulation of gases in the space if downstream valves have been accidentally opened or left open. Check to be sure that the space is safe before re-entering it.

Vapors from chlorinated solvents can be decomposed by the heat of the arc (or flame) to form PHOSGENE, a highly toxic gas, and other lung and eye irritating products. The ultraviolet (radiant) energy of the arc can also decompose trichloroethylene and perchloroethylene vapors to form phosgene. DO NOT WELD or cut where solvent vapors can be drawn into the welding or cutting

atmosphere or where the radiant energy can penetrate to atmospheres containing even minute amounts of trichloroethylene or perchloroethylene.

C. Fire and Explosion Prevention

Causes of fire and explosion are: combustibles reached by the arc, flame, flying sparks, hot slag or heated material; misuse of compressed gases and cylinders; and short circuits.

BE AWARE THAT flying sparks or falling slag can pass through cracks, along pipes, through windows or doors, and through wall or floor openings, out of sight of the goggled operator. Sparks and slag can fly 35 feet.

To prevent fires and explosion:

Keep equipment clean and operable, free of oil, grease, and (in electrical parts) of metallic particles that can cause short circuits.

If combustibles are in area, do NOT weld or cut. Move the work if practicable, to an area free of combustibles. Avoid paint spray rooms, dip tanks, storage areas, ventilators. If the work cannot be moved, move combustibles at least 35 feet away out of reach of sparks and heat; or protect against ignition with suitable and snug-fitting, fire-resistant covers or shields.

Walls touching combustibles on opposite sides should not be welded on (or cut). Walls, ceilings, and floor near work should be protected by heat-resistant covers or shields.

Fire watcher must be standing by with suitable fire extinguishing equipment during and for some time after welding or cutting if:

a. appreciable combustibles (including building construction) are within 35 feet

b. appreciable combustibles are further than 35 feet but can be ignited by sparks

c. openings (concealed or visible) in floors or walls within 35 feet may expose combustibles to sparks

d. combustibles adjacent to walls, ceilings, roofs, or metal partitions can be ignited by radiant or conducted heat.

Hot work permit should be obtained before operation to ensure supervisor's approval that adequate precautions have been taken.

After work is done, check that area is free of sparks, glowing embers, and flames.

An empty container that held combustibles, or that can produce flammable or toxic vapors when heated, must never be welded on or cut, unless container has first been cleaned as described in AWS Standard A6.0, listed 7 in Standards Index.

This includes: a thorough steam or caustic cleaning (or a solvent or water washing, depending on the combustible's solubility) followed by purging and inerting with nitrogen or carbon dioxide, and using protective equipment as recommended in A6.0. Waterfilling just below working level may substitute for inerting.

A container with unknown contents should be cleaned (see preceding paragraph). Do NOT depend on sense of smell or sight to determine if it is safe to weld or cut.

Hollow castings or containers must be vented before welding or cutting. They can explode.

Explosive atmospheres. Never weld or cut where the air may contain flammable dust, gas, or liquid vapors (such as gasoline).

D. Compressed Gas Equipment

Standard precautions. Comply with precautions in this manual, and those detailed in CGA Standard P-1, SAFE HANDLING OF COMPRESSED GASES IN CYLINDERS, listed 11 in Standards Index.

1. Pressure Regulators

Regulator relief valve is designed to protect only the regulator from overpressure; it is not intended to protect any downstream equipment. Provide such protection with one or more relief devices.

Never connect a regulator to a cylinder containing gas other than that for which the regulator was designed.

Remove faulty regulator from service immediately for repair (first close cylinder valve). The following symptoms indicate a faulty regulator:

Leaks-if gas leaks externally.
Excessive Creep-if delivery pressure continues to rise with downstream valve closed.
Faulty Gauge-if gauge pointer does not move off stop pin when pressurized, nor returns to stop pin after pressure release.

Repair. Do NOT attempt to repair. Send faulty regulators for repair to manufacturer's designated repair center, where special techniques and tools are used by trained personnel.

2. Cylinders

Cylinders must be handled carefully to prevent leaks and damage to their walls, valves, or safety devices:

Avoid electrical circuit contact with cylinders including third rails, electrical wires, or welding circuits. They can produce short circuit arcs that may lead to a serious accident. (See 1-3C.)

ICC or DOT marking must be on each cylinder. It is an assurance of safety when the cylinder is properly handled.

Identifying gas content. Use only cylinders with name of gas marked on them; do not rely on color to identify gas content. Notify supplier if unmarked. NEVER DEFACE or alter name, number, or other markings on a cylinder. It is illegal and hazardous.

Empties: Keep valves closed, replace caps securely; mark MT; keep them separate from FULLS and return promptly.

Prohibited use. Never use a cylinder or its contents for other than its intended use, NEVER as a support or roller.

Locate or secure cylinders so they cannot be knocked over.

Passageways and work areas. Keep cylinders clear of areas where they may be struck.

Transporting cylinders. With a crane, use a secure support such as a platform or cradle. Do NOT lift cylinders off the ground by their valves or caps, or by chains, slings, or magnets.

Do NOT expose cylinders to excessive heat, sparks, slag, and flame, etc. that may cause rupture. Do not allow contents to exceed 130°F. Cool with water spray where such exposure exists.

Protect cylinders particularly valves from bumps, falls, falling objects, and weather. Replace caps securely when moving cylinders.

Stuck valve. Do NOT use a hammer or wrench to open a cylinder valve that can not be opened by hand. Notify your supplier.

Mixing gases. Never try to mix any gases in a cylinder.

Never refill any cylinder.

Cylinder fittings should never be modified or exchanged.

3. Hose

Prohibited use. Never use hose other than that designed for the specified gas. A general hose identification rule is: red for fuel gas, green for oxygen, and black for inert gases.

Use ferrules or clamps designed for the hose (not ordinary wire or other substitute) as a binding to connect hoses to fittings.

No copper tubing splices. Use only standard brass fittings to splice hose.

Avoid long runs to prevent kinks and abuse. Suspend hose off ground to keep it from being run over, stepped on, or otherwise damaged.

Coil excess hose to prevent kinks and tangles.

Protect hose from damage by sharp edges, and by sparks, slag, and open flame.

Examine hose regularly for leaks, wear, and loose connections. Immerse pressured hose in water; bubbles indicate leaks.

Repair leaky or worn hose by cutting area out and splicing (1-2D3). Do NOT tape.

4. Proper Connections

Clean cylinder valve outlet of impurities that may clog orifices and damage seats before connecting regulator. Except for hydrogen, crack valve momentarily, pointing outlet away from people and sources of ignition. Wipe with a clean lintless cloth.

Match regulator to cylinder. Before connecting, check that the regulator label and cylinder marking area, and that the regulator inlet and cylinder outlet match. NEVER CONNECT a regulator designed for a particular gas or gases to a cylinder containing any other gas.

Tighten connections. When assembling threaded connections, clean and smooth seats where necessary. Tighten. If connection leaks, disassemble, clean, and retighten using properly fitting wrench.

Adapters. Use a CGA adapter (available from your supplier) between cylinder and regulator, if one is required. use two wrenches to tighten adapter marked RIGHT and LEFT HAND threads.

Regulator outlet (or hose) connections may be identified by right hand threads for oxygen and left hand threads (with grooved hex on nut or shank) for fuel gas.

5. Pressurizing Steps:

Drain regulator of residual gas through suitable vent before opening cylinder (or manifold valve) by turning adjusting screw in (clockwise). Draining prevents excessive compression heat at high pressure seat by allowing seat to open on pressurization. Leave adjusting screw engaged slightly on single-stage regulators.

Stand to side of regulator while opening cylinder valve.

Open cylinder valve slowly so that regulator pressure increases slowly. When gauge is pressurized (gauge reaches regulator maximum) leave cylinder valve in following position: For oxygen, and inert gases, open fully to seal stem against possible leak. For fuel gas, open to less than one turn to permit quick emergency shutoff.

Use pressure charts (available from your supplier) for safe and efficient, recommended pressure settings on regulators.

Check for leaks on first pressurization and regularly there-after. Brush with soap solution (capfull of Ivory Liquid* or equivalent per gallon of water). Bubbles indicate leak. Clean off soapy water after test; dried soap is combustible.

E. User Responsibilities

Remove leaky or defective equipment from service immediately for repair. See User Responsibility statement in equipment manual.

F. Leaving Equipment Unattended

Close gas supply at source and drain gas.

G. Rope Staging-Support

Rope staging-support should not be used for welding or cutting operation; rope may burn.

*Trademark of Proctor & Gamble.

1-3. ARC WELDING

Comply with precautions in 1-1, 1-2, and this section. Arc Welding, properly done, is a safe process, but a careless operator invites trouble. The equipment carries high currents at significant voltages. The arc is very bright and hot. Sparks fly, fumes rise, ultraviolet and infrared energy radiates, weldments are hot, and compressed gases may be used. The wise operator avoids unnecessary risks and protects himself and others from accidents. Precautions are described here and in standards referenced in index.

A. Burn Protection

Comply with precautions in 1-2.

The welding arc is intense and visibly bright. Its radiation can damage eyes, penetrate lightweight clothing, reflect from light-colored surfaces, and burn the skin and eyes. Skin burns resemble acute sunburn, those from gas-shielded arcs are more severe and painful. DON'T GET BURNED; COMPLY WITH PRECAUTIONS.

1. Protective Clothing

Wear long-sleeve clothing (particularly for gas-shielded arc) in addition to gloves, hat, and shoes (1-2A). As necessary, use additional protective clothing such as leather jacket or sleeves, flame-proof apron, and fire-resistant leggings. Avoid outer garments of untreated cotton.

Bare skin protection. Wear dark, substantial clothing. Button collar to protect chest and neck and button pockets to prevent entry of sparks.

2. Eye and Head Protection

Protect eyes from exposure to arc. NEVER look at an electric arc without protection.

Welding helmet or shield containing a filter plate shade no. 12 or denser must be used when welding. Place over face before striking arc.

Protect filter plate with a clear cover plate.

Cracked or broken helmet or shield should NOT be worn; radiation can pass through to cause burns.

Cracked, broken, or loose filter plates must be replaced IMMEDIATELY. Replace clear cover plate when broken, pitted, or spattered.

Flash goggles with side shields MUST be worn under the helmet to give some protection to the eyes should the helmet not be lowered over the face before an arc is struck. Looking at an arc momentarily with unprotected eyes (particularly a high intensity gas-shielded arc) can cause a retinal burn that may leave a permanent dark area in the field of vision.

3. Protection of Nearby Personnel

Enclosed welding area. For production welding, a separate room or enclosed bay is best. In open areas, surround the operation with low-reflective, non-combustible screens or panels. Allow for free air circulation, particularly at floor level.

Viewing the weld. Provide face shields for all persons who will be looking directly at the weld.

Others working in area. See that all persons are wearing flash goggles.

Before starting to weld, make sure that screen flaps or bay doors are closed.

B. Toxic Fume Prevention

Comply with precautions in 1-2B.

Generator engine exhaust must be vented to the outside air. Carbon monoxide can kill.

C. Fire and Explosion Prevention

Comply with precautions in 1-2C.

Equipment's rated capacity. Do not overload arc welding equipment. It may overheat cables and cause a fire.

Loose cable connections may overheat or flash and cause a fire.

Never strike an arc on a cylinder or other pressure vessel. It creates a brittle area that can cause a violent rupture or lead to such a rupture under rough handling.

D. Compressed Gas Equipment

Comply with precautions in 1-2D.

E. Shock Prevention

Exposed hot conductors or other bare metal in the welding circuit, or in ungrounded, electrically-HOT equipment can fatally shock a person whose body becomes a conductor. DO NOT STAND, SIT, LIE, LEAN ON, OR TOUCH a wet surface when welding, without suitable protection.

To protect against shock:

Wear dry insulating gloves and body protection. Keep body and clothing dry. Never work in damp area without adequate insulation against electrical shock. Stay on a dry duckboard, or rubber mat when dampness or sweat can not be avoided. Sweat, sea water, or moisture between body and an electrically HOT part or grounded metal reduces the electrical resistance, and could enable dangerous and possibly lethal currents to flow through the body.

A voltage will exist between the electrode and any conducting object in the work circuit. Examples of conducting objects include, but are not limited to, buildings, electrical tools, work benches, welding power source cases, workpieces, etc. **Never touch the electrode and any metal object unless the welding power source is off.**

1. Grounding the Equipment

Arc welding equipment must be grounded according to the National Electrical Code, and the work must be grounded according to ANSI Z49.1 "Safety In Welding And Cutting."

When installing, connect the frames of each unit such as welding power source, control, work table, and water circulator to the building ground. Conductors must be ade-

quate to carry ground currents safely. Equipment made electrically HOT by stray current may shock, possibly fatally. Do NOT GROUND to electrical conduit, or to a pipe carrying ANY gas or flammable liquid such as oil or fuel.

Three-phase connection. Check phase requirements of equipment before installing. If only 3-phase power is available, connect single-phase equipment to only two wires of the 3-phase line. Do NOT connect the equipment ground lead to the third (live) wire, or the equipment will become electrically HOT-a dangerous condition that can shock, possibly fatally.

Before welding, check ground for continuity. Be sure conductors are touching bare metal of equipment frames at connections.

If a line cord with a ground lead is provided with the equipment for connection to a switchbox, connect the ground lead to the grounded switchbox. If a three-prong plug is added for connection to a grounded mating receptacle, the ground lead must be connected to the ground prong only. If the line cord comes with a three-prong plug, connect to a grounded mating receptacle. Never remove the ground prong from a plug, or use a plug with a broken off ground prong.

2. Electrode Holders

Fully insulated electrode holders should be used. Do NOT use holders with protruding screws.

3. Connectors

Fully insulated lock-type connectors should be used to join welding cable lengths.

4. Cables

Frequently inspect cables for wear, cracks and damage. IMMEDIATELY REPLACE those with excessively worn or damaged insulation to avoid possibly-lethal shock from bared cable. Cables with damaged areas may be taped to give resistance equivalent to original cable.

Keep cable dry, free of oil and grease, and protected from hot metal and sparks.

5. Terminals And Other Exposed Parts

Terminals and other exposed parts of electrical units should have insulating covers secured before operation.

6. Electrode

a. Equipment with output on/off control (contactor)

Welding power sources for use with the gas metal arc welding (GMAW), gas tungsten arc welding (GTAW) and similar processes normally are equipped with devices that permit on-off control of the welding power output. When so equipped the electrode wire becomes electrically HOT when the power source switch is ON and the welding gun switch is closed. Never touch the electrode wire or any conducting object in contact with the electrode circuit unless the welding power source is off.

b. Equipment without output on/off control (no contactor)

Welding power sources used with shielded metal arc welding (SMAW) and similar processes may not be equipped with welding power output on-off control devices. With such equipment the electrode is electrically HOT when the power switch is turned ON. Never touch the electrode unless the welding power source is off.

7. Safety Devices

Safety devices such as interlocks and circuit breakers should not be disconnected or shunted out.

Before installation, inspection, or service, of equipment, shut OFF all power and remove line fuses (or lock or red-tag switches) to prevent accidental turning ON of power. Disconnect all cables from welding power source, and pull all 115 volts line-cord plugs.

Do not open power circuit or change polarity while welding. If, in an emergency, it must be disconnected, guard against shock burns, or flash from switch arcing.

Leaving equipment unattended. Always shut OFF and disconnect all power to equipment.

Power disconnect switch must be available near the welding power source.

F. Protection For Wearers of Electronic Life Support Devices (Pacemakers)

Magnetic fields from high currents can affect pacemaker operation. Persons wearing electronic life support equipment (pacemaker) should consult with their doctor before going near arc welding, gouging, or spot welding operations.

1-4. STANDARDS BOOKLET INDEX

For more information, refer to the following standards or their latest revisions and comply as applicable:

1. ANSI Standard Z49.1, SAFETY IN WELDING AND CUTTING obtainable from the American Welding Society, 550 N.W. LeJeune Rd, Miami, FL 33126.
2. NIOSH, SAFETY AND HEALTH IN ARC WELDING AND GAS WELDING AND CUTTING obtainable from the Superintendent of Documents, U.S. Government Printing Office, Washington, D.C. 20402.
3. OSHA, SAFETY AND HEALTH STANDARDS, 29CFR 1910, obtainable from the Superintendent of Documents, U.S. Government Printing Office, Washington, D.C. 20402.
4. ANSI Standard Z87.1, SAFE PRACTICES FOR OCCUPATION AND EDUCATIONAL EYE AND FACE PROTECTION obtainable from the American National Standards Institute, 1430 Broadway, New York, NY 10018.

5. ANSI Standard Z41.1, STANDARD FOR MEN'S SAFETY-TOE FOOTWEAR obtainable from the American National Standards Institute, 1430 Broadway, New York, NY 10018.
6. ANSI Standard Z49.2, FIRE PREVENTION IN THE USE OF CUTTING AND WELDING PROCESSES obtainable from the American National Standards Institute, 1430 Broadway, New York, NY 10018.
7. AWS Standard A6.0, WELDING AND CUTTING CONTAINERS WHICH HAVE HELD COMBUSTIBLES obtainable from the American Welding Society, 550 N.W. LeJeune Rd, Miami, FL 33126.
8. NFPA Standard 51, OXYGEN-FUEL GAS SYSTEMS FOR WELDING, CUTTING, AND ALLIED PROCESSES obtainable from the National Fire Protection Association, Batterymarch Park, Quincy, MA 02269.
9. NFPA Standard 70, NATIONAL ELECTRICAL CODE obtainable from the National Fire Protection Association, Batterymarch Park, Quincy, MA 02269.
10. NFPA Standard 51B, CUTTING AND WELDING PROCESSES obtainable from the National Fire Protection Association, Batterymarch Park, Quincy, MA 02269.
11. CGA Pamphlet P-1, SAFE HANDLING OF COMPRESSED GASES IN CYLINDERS obtainable from the Compressed Gas Association, 1235 Jefferson Davis Highway, Suite 501, Arlington, VA 22202.
12. CSA Standard W117.2, CODE FOR SAFETY IN WELDING AND CUTTING obtainable from the Canadian Standards Association, Standards Sales, 178 Rexdale Boulevard, Rexdale, Ontario, Canada M9W 1R3.
13. NWSA booklet, WELDING SAFETY BIBLIOGRAPHY obtainable from the National Welding Supply Association, 1900 Arch Street, Philadelphia, PA 19103.
14. American Welding Society Standard AWSF4.1, RECOMMENDED SAFE PRACTICES FOR THE PREPARATION FOR WELDING AND CUTTING OF CONTAINERS AND PIPING THAT HAVE HELD HAZARDOUS SUBSTANCES, obtainable from the American Welding Society, 550 N.W. LeJeune Rd, Miami, FL 33126.
15. ANSI Standard Z88.2, PRACTICE FOR RESPIRATORY PROTECTION, obtainable from the American National Standards Institute, 1430 Broadway, New York, NY 10018.

SECTION 2 – SAFETY PRECAUTIONS AND SIGNAL WORDS

2-1. GENERAL INFORMATION AND SAFETY

A. General

Information presented in this manual and on various labels, tags, and plates on the unit pertains to equipment design, installation, operation, maintenance, and troubleshooting which should be read, understood, and followed for the safe and effective use of this equipment.

The nameplate of this unit uses international symbols for labeling the front panel controls. The symbols also appear at the appropriate section in the text.

B. Safety

The installation, operation, maintenance, and troubleshooting of arc welding equipment requires practices and procedures which ensure personal safety and the safety of others. Therefore, this equipment is to be installed, operated, and maintained only by qualified persons in accordance with this manual and all applicable codes such as, but not limited to, those listed at the end of Section 1 – Safety Rules For Operation Of Arc Welding Power Source.

2-2. SAFETY ALERT SYMBOL AND SIGNAL WORDS

The following safety alert symbol and signal words are used throughout this manual to call attention to and identify different levels of hazard and special instructions.

This safety alert symbol is used with the signal words WARNING and CAUTION to call attention to the safety statements.

WARNING statements identify procedures or practices which must be followed to avoid serious personal injury or loss of life.

CAUTION statements identify procedures or practices which must be followed to avoid minor personal injury or damage to this equipment.

IMPORTANT *statements identify special instructions necessary for the most efficient operation of this equipment.*

SECTION 3 – SPECIFICATIONS

Table 3-1. Specifications

Electrode Wire Diameter Capability	Speed Range	Max. Weld Output @ 100% Duty Cycle	Weight	
			Net	Ship
1/16 Thru 1/8 in. (1.6 Thru 3.2 mm)	Depends On Arc Voltage	100 Volts @ 750 Amperes	115 lbs. (52 kg)	125 lbs. (57 kg)

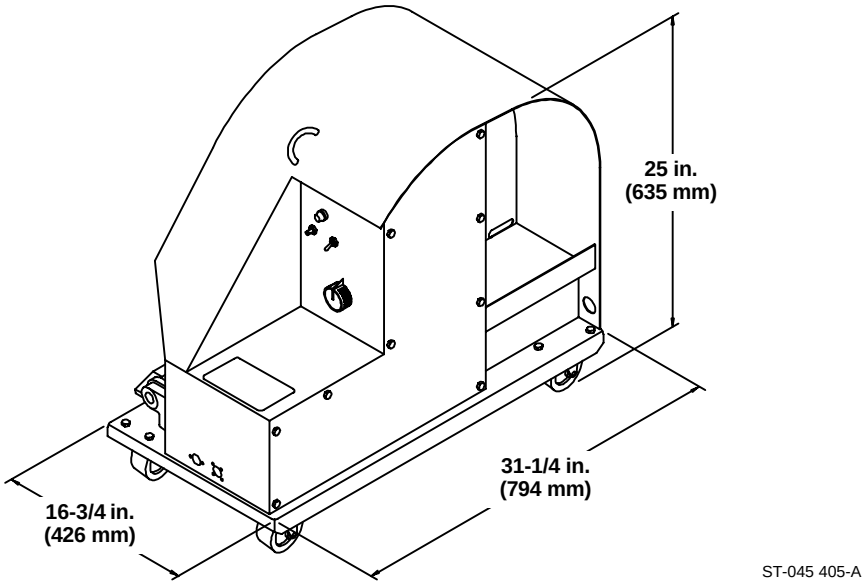

Figure 3-1. Wire Feeder Dimensions

3-1. DESCRIPTION

This unit is a heavy-duty wire feeder designed to run off the arc voltage of a constant current or constant voltage dc welding power source. The four drive roll system is designed for use with 1/16 in. (1.6 mm) through 1/8 in. (3.2 mm) flux-cored or self-shielding welding wire.

All necessary equipment and controls are provided with the wire feeder to supply welding wire to the gun.

An optional gas valve, voltmeter, and/or remote jog control can be provided.

SECTION 4 – INSTALLATION OR RELOCATION

4-1. LOCATION (Figure 3-1)

The service life and efficiency of this unit and associated components are reduced when they are subjected to high levels of dust, dirt, moisture, corrosive vapors, and extreme heat.

A proper installation site should be selected for the wire feeder if the unit is to provide dependable service. Lead lengths must be considered when installing the unit.Suitable space should be maintained around the unit for making necessary connections and for maintenance functions.

4-2. DRIVE MOTOR VENT SCREW

The drive motor is provided with a vent screw which must be removed before operating the wire feeder. Remove right side panel to gain access to the drive motor.

CAUTION: PRESSURE IN WIRE DRIVE MOTOR GEAR BOX will damage motor.

- *Remove vent screw before operation.*

Warranty is void if the vent screw is not removed before operation.

4-3. WIRE GUIDE AND DRIVE ROLL INSTALLATION (Figure 4-1)

Upon initial installation, or as a result of changes in wire size and type, it is necessary to install the required drive rolls and wire guides. Select drive rolls according to Table 9-1.

After obtaining the appropriate drive rolls and wire guides, proceed as follows:

A. Wire Guide Installation

1. Loosen the wire guide securing screws.

IMPORTANT: *Wire guides should be installed so that the tip(s) of the guide is as close to the drive roll as possible without touching.*

2. Install wire guides as illustrated in Figure 4-1. Adjust after installing drive rolls, and secure by tightening securing screws.

B. Wire Guide And Drive Roll Installation

1. Turn nut one click until lobes of nut line up with lobes of drive roll carrier.

2. Slide drive roll onto drive roll carrier. Turn nut one click.

IMPORTANT: *When the grooves become worn, reverse rolls to locate unused groove in position to feed wire.*

IMPORTANT: *The alignment of the wire drive assembly is factory set and should not require readjustment. If readjustment of the motor gear and drive gears is necessary, refer to Section 7-2.*

4-4. WELDING GUN CONNECTIONS

A. Gun Connector To Drive Assembly (Provides Weld Power And Shielding Gas, If Applicable) (Figure 4-1)

IMPORTANT: *The outlet guide is provided as part of the gun or gun adapter assembly.*

1. Loosen the gun/feeder connector securing knob.

IMPORTANT: *The outlet guide should be installed so that tip of guide is as close to the drive rolls as possible without touching.*

2. Insert the gun/feeder connector, or gun/feeder adapter if required, which includes installed outlet guide, into drive assembly opposite inlet guide.

3. Tighten gun/feeder connector securing knob.

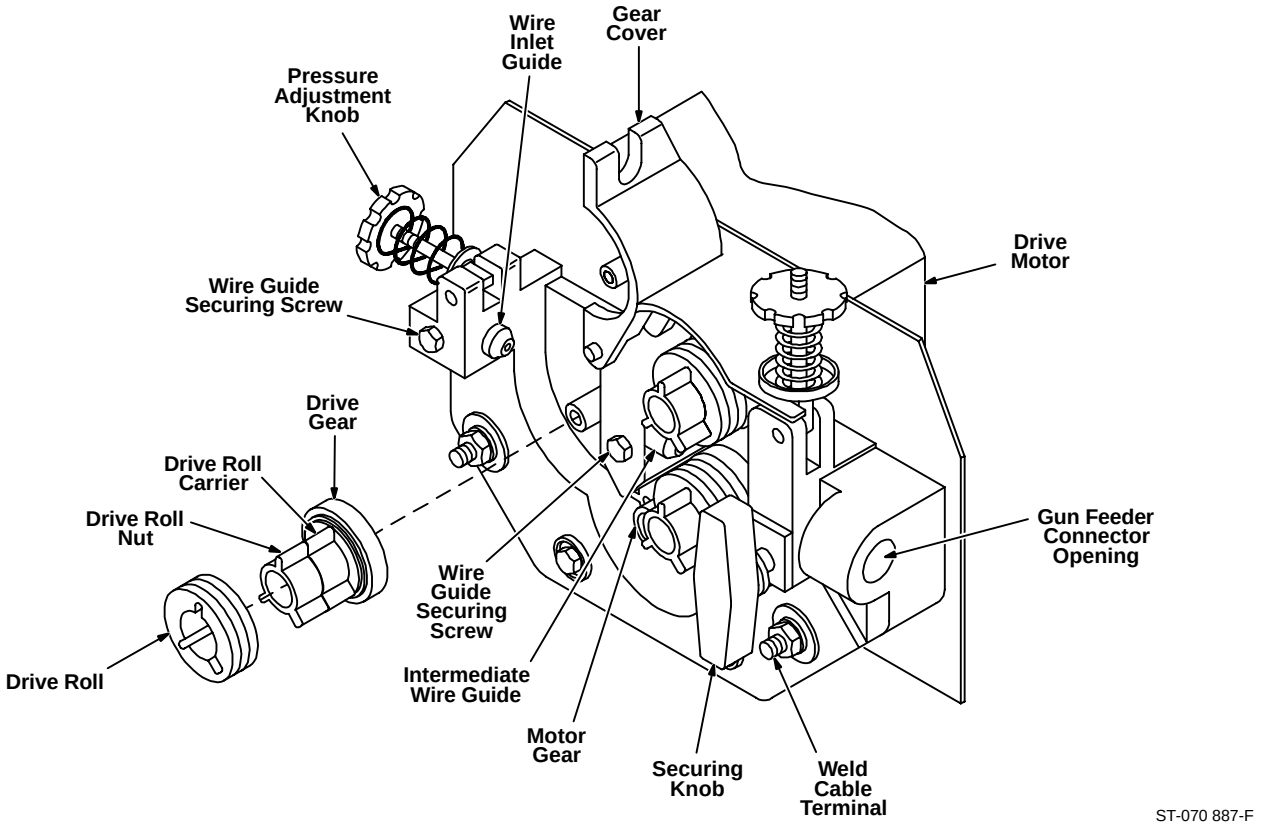

Figure 4-1. Drive Roll And Wire Guide Installation On Four Drive Roll Units

B. Shielding Gas (If Applicable)

An integral gas input fitting is provided on the wire drive assembly for guns utilizing this type of connection. If the gun requires a separate shielding gas connection, disconnect the hose from the gas fitting on drive assembly, install proper fittings or connectors, and connect to gas hose from gun.

C. Weld Cable (If Applicable)

WARNING: ELECTRIC SHOCK can kill.

- *Do not touch live electrical parts.*
- *Shut down welding power source and disconnect input power employing lockout/tagging procedures before making weld cable connections.*

Lockout/tagging procedures consist of padlocking line disconnect switch in open position, removing fuses from fuse box, or shutting off and red-tagging circuit breaker or other disconnecting device.

- *Stop engine on welding generator before working on wire feeder.*

ARCING can damage weld cable terminal.

- *Clean weld cable terminal before connecting weld cable if necessary.*
- *Tighten terminal nut securely.*

Loose or dirty connections can cause erratic weld output.

Connect the weld cable from the gun, if applicable, to the front weld cable terminal on the drive assembly.

4-5. VOLTAGE SENSING LEAD CONNECTION

Connect the voltage sensing lead clamp to the workpiece.

4-6. SHIELDING GAS CONNECTION (Models With Optional Gas Valve)

Obtain a shielding gas hose of proper size, type, and length and a gas fitting with 5/8-18 right-hand threads to make shielding gas connection to control box. Proceed as follows:

1. Install gas fitting onto one end of shielding gas hose.
2. Route end of gas hose with fitting to gas input fitting on gas valve on rear of control box.
3. Route and connect remaining end of hose to regulator/flowmeter on shielding gas supply.

4-7. 115 VOLTS AC CONNECTION (Models With Optional Gas Valve)

The optional gas valve require 115 volts ac to function. Connect the power cord from the wire feeder gas valve to a 115 volts ac, 60 Hz receptacle when use of the gas valve is desired.

4-8. WELDING POWER SOURCE/WIRE FEEDER WELD CABLE CONNECTIONS (Figure 4-2)

ELECTRIC SHOCK can kill.

- *Do not touch live electrical parts.*
- *Shut down welding power source and disconnect input power employing lockout/tagging procedures before making weld cable connections.*

Lockout/tagging procedures consist of padlocking line disconnect switch in open position, removing fuses from fuse box, or shutting off and red-tagging circuit breaker or other disconnecting device.

- *Stop engine on welding generator before working on wire feeder.*

ARCING can damage weld cable terminal.

- *Clean weld cable terminal before connecting weld cable if necessary.*
- *Tighten terminal nut securely.*

Loose or dirty connections can cause erratic weld output.

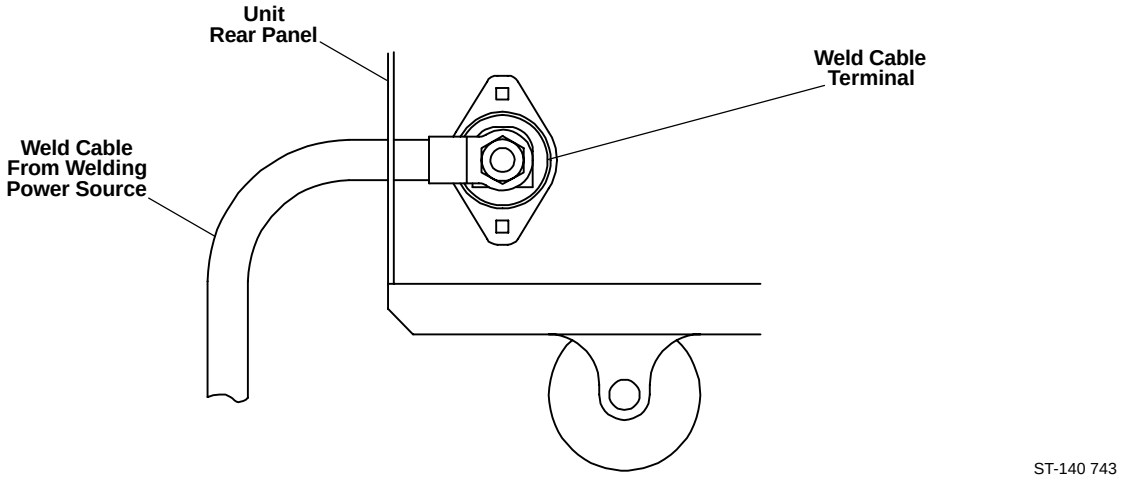

Figure 4-2. Wire Feeder Installation

Select and prepare weld cable according to information in welding power source Owner's Manual.

For Electrode Positive/Reverse Polarity connections proceed as follows:

1. Route weld cable through grommet in rear panel of wire feeder, and connect cable to weld cable terminal. Be sure cable does not interfere with wire feed.
2. Connect remaining end of cable to the Positive (+) weld output terminal on welding power source (see welding power source Owner's Manual.)
3. Route and connect another weld cable of adequate size and capacity from the Negative (–) weld output terminal (see welding power source Owner's Manual) to workpiece.

IMPORTANT: *For Electrode Negative/Straight Polarity connections,reverse connections at the weld output terminals. Be sure the POLARITY switch (see Section 5-3) corresponds to the weld output connections.*

4-9. WELDING WIRE INSTALLATION

A. Installation Of Spool-Type Wire (Figure 4-3)

1. Remove retaining ring.
2. Slide spool of wire onto hub so that wire feeds off bottom of spool.
3. Rotate spool until hole in spool aligns with pin in hub. Slide spool onto hub until it seats against back flange of the hub.
4. Reinstall retaining ring onto hub.

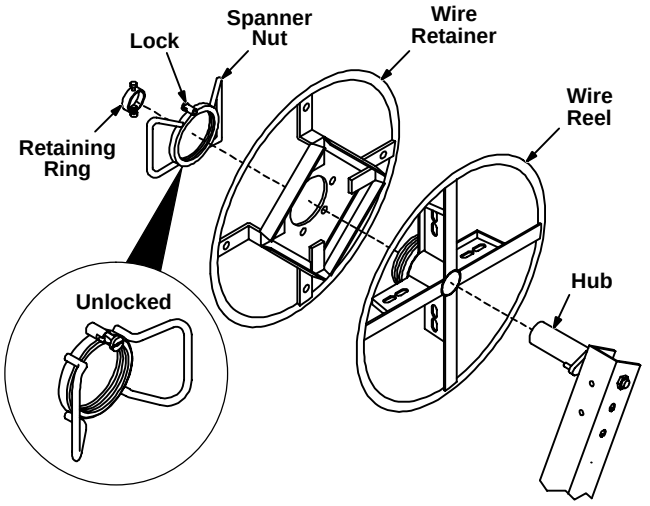

Ref. ST-127 308-B

Figure 4-3. Wire Reel And Reel-Type Wire Installation

B. Installation Of Wire Reel And Reel-Type Wire (Figure 4-3)

1. Remove retaining ring and, if applicable, wire reel assembly from hub.
2. Lay wire reel assembly flat on table or floor.
3. Pull lock and turn. Remove spanner nut from wire reel assembly.
4. Remove wire retainer, and install wire onto wire reel. Be sure wire feeds off bottom of reel.
5. Reinstall wire retainer. Tighten spanner nut until lock is in position over hole in wire retainer. Pull lock and turn to insert locking pin into wire retainer.
6. Slide wire reel assembly onto hub, and turn assembly until hub guide pin is seated in reel.
7. Reinstall retaining ring onto hub.

C. Adjustment Of Hub Tension (Figure 4-3)

Check the hub tension by slowly rotating the wire spool or reel. The wire should unwind freely, but hub tension should be sufficient to keep wire taut and prevent backlash when the wire feed stops. If adjustment is required, loosen or tighten the hex nut on the end of the hub support shaft accordingly.

4-10. WELDING WIRE THREADING

WARNING: ELECTRIC SHOCK can kill; MOVING PARTS can cause injury.

- *Do not touch live electrical parts.*
- *Keep away from moving parts.*
- *Do not energize welding power source until instructed to do so.*

The welding wire and all metal parts in contact with it are energized while welding.

WELDING WIRE can cause puncture wounds; HOT SURFACES can burn skin.

- *Do not press JOG button until instructed to do so.*
- *Do not point gun toward any part of the body, any conductive surface, or other personnel when threading welding wire.*
- *Allow gun to cool before touching.*

LOOSE WELDING WIRE can cause injury.

- *Keep a firm hold on the wire during installation, removal, and threading operations.*

Spooled wire has a tendency to unravel rapidly when loosened from the spool.

1. Install the wire as instructed in Section 4-9.
2. Cut off any portion of the free end of the wire which is not straight. If necessary, straighten wire to remove cast. Be sure that the cut end is free from rough surfaces to permit proper feeding.
3. Adjust hub tension according to Section 4-9C if necessary.
4. Loosen knobs on the drive roll pressure adjustments, pivot pressure adjustments free of the covers, and pivot pressure gear assemblies away to an open position.
5. Manually feed wire through the inlet wire guide and intermediate wire guide, if applicable, and on into the outlet wire guide. Feed approximately 4 in. (102 mm) of wire into the outlet wire guide.

IMPORTANT: *If the U-Cogged drive rolls do not align properly when the gear cover is closed, pivot the gear cover away from the drive gear, and rotate pressure gear one tooth (see Section 4-3).*

6. Pivot the pressure gear assemblies closed making sure the teeth on the pressure gears mesh with the teeth on the drive gears. The welding wire must be in the grooves of the drive rolls. (See Section 7-2 if wire does not feed in the grooves of the drive rolls.)
7. Pivot the pressure adjustment knobs until the washers on the pressure adjustments are seated on top of the gear covers.
8. Turn the pressure adjustment knobs in a clockwise direction until the drive rolls are tight against the welding wire. Do not overtighten. Further adjustment to attain desired clamping pressure can be made after the welding power source and wire feeder are put into operation.
9. Lay gun cable assembly out flat and straight (no coils in the cable/conduit).
10. Energize the welding power source.

WARNING: ELECTRIC SHOCK can kill; TANGLED WELDING WIRE can touch case causing welding power source open-circuit voltage to be present on case if JOG button is pressed.

- *Do not touch wire feeder case if JOG button is pressed and wire does not feed.*
- *If wire stops feeding, turn off welding power source, and determine the cause.*
- *Correct any hub tension, jammed wire, or gun liner damage problems before trying to continue welding.*

11. Press the JOG button (see WARNING block at beginning of this Section). Wire feeds if drive roll pressure is properly adjusted to prevent slippage. If wire slippage is noticed, turn pressure adjustment knob clockwise in 1/4 turn increments until wire slippage stops. If excess pressure is required, check gun contact tube and gun liner for correct size or obstructions. Release the JOG button when welding wire extends approximately 1 in. (25 mm) out of gun tip.
12. Shut down welding power source.

SECTION 5 – OPERATOR CONTROLS

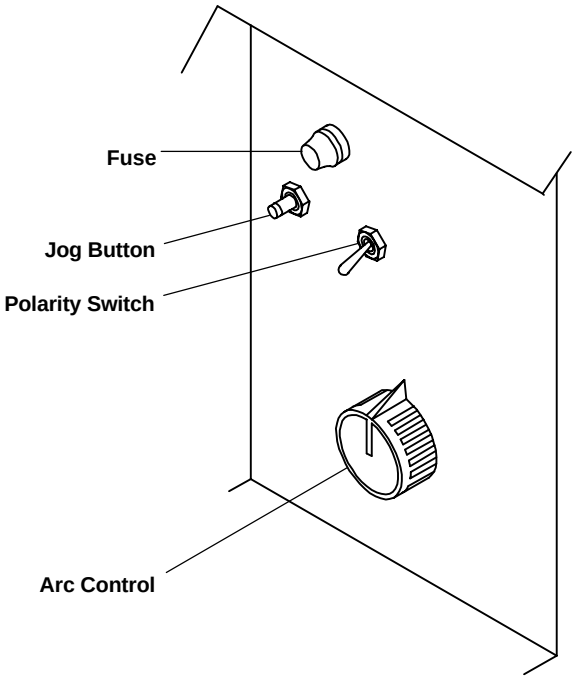

Ref. ST-045 405-A

Figure 5-1. Operator Controls

5-1. ARC LENGTH CONTROL (Figure 5-1 And Table 5-1)

The ARC LENGTH control provides a means of selecting the rate at which welding wire feeds into the weld. Rotating the ARC LENGTH control clockwise increases the wire feed speed. The scale surrounding the control is calibrated in percent, zero to 100 (SHORT to LONG).

IMPORTANT: *If the welding power source has a high or low arc voltage, the wire feed speed is correspondingly faster or slower.*

5-2. JOG BUTTON (Figure 5-1)

The JOG button is a momentary-contact switch. When pressed, it completes the circuit to the motor without having to strike an arc. This switch permits jogging of the wire at the setting of the ARC CONTROL control, without energizing the optional shielding gas valve.

5-3. POLARITY SWITCH (Figure 5-1)

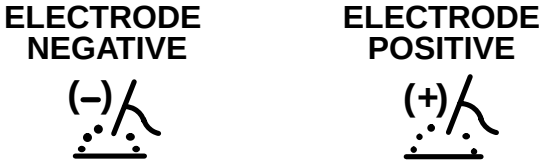

Place the POLARITY switch in the ELECTRODE NEGATIVE position when the weld output cables are connected to the welding power source for electrode negative welding.

Place the POLARITY switch in the ELECTRODE POSITIVE position when the weld output cables are connected to the welding power source for electrode positive welding.

IMPORTANT: *Be sure the weld cables from the welding power source are connected for the position of the POLARITY switch. If the weld output cable connections do not correspond to the switch position, the welding wire retracts into the gun.*

5-4. OPTIONAL VOLTMETER

The voltmeter indicates dc arc voltage while welding. When the JOG button is pressed, the voltmeter indicates the voltage applied by the jog circuit.

5-5. OPTIONAL REMOTE JOG SWITCH

The Remote Jog switch allows the operator to jog welding wire from the work area. The Remote Jog switch functions the same as the front panel JOG button.

The JOG button on the unit is also functional when the Remote Jog switch is connected.

Table 5-1. Arc Voltage Wire Speed

Arc Voltage	Arc Length Control Setting										
	0	**10**	**20**	**30**	**40**	**50**	**60**	**70**	**80**	**90**	**100**
15	169	154	136	120	105	92	77	64	54	41	28
16	182	170	146	128	113	100	85	70	59	46	33
17	195	180	156	138	121	105	92	77	67	51	38
18	205	190	167	149	130	113	100	82	72	56	46
19	215	200	182	159	141	123	105	87	77	62	49
20	226	213	192	170	148	133	113	92	82	67	51
21	238	226	200	177	156	138	123	97	87	72	56
22	251	235	210	187	167	146	128	105	92	77	62
23	269	246	221	197	172	156	136	115	97	82	67
24	274	262	230	208	187	167	144	123	108	85	72
25	292	272	241	218	195	174	149	128	113	90	74
26	303	282	251	226	200	182	156	136	118	95	79
27	312	292	262	235	210	187	162	144	123	100	82
28	326	305	275	244	220	197	170	149	128	105	85
29	336	315	285	256	228	205	174	154	136	110	89
30	349	328	295	266	236	210	187	161	141	115	92
31	362	338	308	274	246	221	192	169	146	120	100
32	372	354	321	287	254	233	200	177	154	128	105
	Inches Per Minute*										

*Rounded Off

SECTION 6 – SEQUENCE OF OPERATION

6-1. FLUX CORE ARC WELDING (FCAW) AND GAS METAL ARC WELDING (GMAW)

WARNING: ELECTRIC SHOCK can kill; MOVING PARTS can cause serious injury; IMPROPER AIRFLOW AND EXPOSURE TO ENVIRONMENT can damage internal parts.

- *Do not touch live electrical parts.*
- *Keep away from moving parts.*
- *Keep all covers and panels in place while operating.*

Warranty is void if the wire feeder is operated with any portion of the outer enclosure removed.

ARC RAYS, SPARKS, AND HOT SURFACES can burn eyes and skin; NOISE can damage hearing.

- *Wear correct eye, ear, and body protection.*

FUMES AND GASES can seriously harm your health.

- *Keep your head out of the fumes.*
- *Ventilate to keep from breathing fumes and gases.*
- *If ventilation is inadequate, use approved breathing device.*

WELDING WIRE can cause puncture wounds.

- *Do not point gun toward any part of the body, any conductive surface, or other personnel.*

HOT METAL, SPATTER, AND SLAG can cause fire and burns.

- *Watch for fire.*
- *Keep a fire extinguisher nearby, and know how to use it.*
- *Do not use near flammable material.*
- *Allow work and equipment to cool before handling.*

MAGNETIC FIELDS FROM HIGH CURRENTS can affect pacemaker operation.

- *Wearers should consult their doctor before going near arc welding, gouging, or spot welding operations.*

See Section 1 – Safety Rules For Operation Of Arc Welding Power Source.

1. Make all connections and thread welding wire as instructed in Section 4.
2. Wear dry insulating gloves and clothing.
3. Connect work clamp to clean, bare metal at workpiece.
4. Rotate the ARC LENGTH control to the desired setting (see Section 5-1).
5. Turn on the shielding gas at the source, if applicable.
6. Wear welding helmet with proper filter lens according to ANSI Z49.1.
7. Energize welding power source.

WARNING: ELECTRIC SHOCK can kill.

- *Do not touch live electrical parts.*
- *Do not touch welding wire or any metal part in contact with it while welding.*

The welding wire and all metal parts in contact with it carry weld output when the welding power source contactor is energized.

8. Touch the welding wire to workpiece to start the arc and gas flow, if applicable. Wire feeds if drive roll pressure is properly adjusted to prevent slippage. If wire slippage is noticed, adjust drive roll pressure according to Section 4-10.

WARNING: ELECTRIC SHOCK can kill; TANGLED WELDING WIRE can touch case causing welding power source open-circuit voltage to be present on case if JOG button is pressed.

- *Do not touch wire feeder case if JOG button is pressed and wire does not feed.*
- *If wire stops feeding, turn off welding power source, and determine the cause.*
- *Correct any hub tension, jammed wire, or gun liner damage problems before trying to continue welding.*

9. To stop wire feed, pull the gun away from the workpiece.

6-2. SHUTTING DOWN

1. Shut down welding power source.
2. Turn off shielding gas at the source, if applicable.
3. Turn off all associated equipment.

WARNING: HIGH CONCENTRATION OF SHIELDING GAS can harm health or kill.

- *Shut off gas supply when not in use.*

7-1. ROUTINE MAINTENANCE

IMPORTANT: *Every six months inspect the labels on this unit for legibility. All precautionary labels must be maintained in a clearly readable state and replaced when necessary. See Parts List for part number of precautionary labels.*

WARNING: ELECTRIC SHOCK can kill.

- *Do not touch live electrical parts.*
- *Shut down welding power source, and disconnect input power employing lockout/tagging procedures before inspecting, maintaining, or servicing.*

Lockout/tagging procedures consist of padlocking line disconnect switch in open position, removing fuses from fuse box, or shutting off and red-tagging circuit breaker or other disconnecting device.

- *Stop engine on welding generator before working on wire feeder.*

MOVING PARTS can cause serious injury.

- *Keep away from moving parts.*

HOT SURFACES can cause severe burns.

- *Allow cooling period before servicing.*

Maintenance to be performed only by qualified persons.

Table 7-1. Maintenance Schedule

Frequency*	Maintenance
Every month.	Units in heavy service environments: Check labels, hoses, and cables; clean internal parts and drive rolls.
Every 6 months.	Check all labels (see IMPORTANT block, Section 7-1).
	Clean drive rolls (see Section 7-1B).

*Frequency of service is based on units operated 40 hours per week. Increase frequency of maintenance if usage exceeds 40 hours per week.

A. Internal Cleaning

WARNING: Read and follow safety information at beginning of entire Section 7-1 before proceeding.

Every six months, blow out or vacuum dust and dirt from the inside of the wire feeder. Remove the outer enclosure, and use a clean, dry airstream or vacuum suction for the cleaning operation. If dirty or dusty conditions are present, clean the unit monthly.

B. Cleaning Of Drive Rolls

WARNING: Read and follow safety information at beginning of entire Section 7-1 before proceeding.

MOVING PARTS can cause serious injury.

- *Keep away from moving parts.*

HIGH ROTATIONAL SPEED may cause damage to drive rolls and injure personnel.

- *Do not allow drive rolls to rotate at high speed if compressed air is used for cleaning the drive roll assembly.*

It is necessary to remove the drive rolls for proper cleaning of the wire grooves (see Section 4-3 for removal and installation instructions). Use a wire brush to clean rolls.

IMPORTANT: *Failure to properly maintain the drive rolls can result in a buildup of wire particles which decreases the efficiency of the wire feeding operation.*

1. Remove the three drive roll securing screws from each drive roll, and remove drive rolls (see Section 4-3).
2. Using a wire brush, remove the buildup of wire particles in the wire grooves.
3. Reinstall drive rolls according to Section 4-3.
4. Resume operation.

7-2. ALIGNING MOTOR GEAR AND DRIVE GEARS (Figure 4-1)

WARNING: ELECTRIC SHOCK can kill.

- *Do not touch live electrical parts.*
- *Shut down welding power source, and disconnect input power employing lockout/tagging procedures before inspecting, maintaining, or servicing.*

Lockout/tagging procedures consist of padlocking line disconnect switch in open position, removing fuses from fuse box, or shutting off and red-tagging circuit breaker or other disconnecting device.

- *Stop engine on welding generator before working on wire feeder.*

MOVING PARTS can cause serious injury.

- *Keep away from moving parts.*

HOT SURFACES can cause severe burns.

- *Allow cooling period before servicing.*

Horizontal and vertical alignment of the motor gear with the drive gears is factory set and should not require readjustment. If readjustment becomes necessary, proceed as follows:

A. Horizontal Adjustment

Behind the motor gear are spring washers. Turn motor gear securing bolt in or out until motor gear is horizontally aligned with drive gears.

B. Vertical Alignment

The wire drive housing is made with mounting holes of sufficient clearance to provide adjustment of the housing up or down in relation to the motor gear.

CAUTION: IMPROPER CLEARANCE between motor gear and drive gears can result in equipment damage.

- *Maintain 0.003 in. (0.076 mm) clearance between motor gear and drive gears.*

If proper clearance is not maintained, the gears may wear severely, bind, break, or cause erratic wire feed.

1. Loosen housing mounting bolts and weld cable terminal nuts.
2. Slide wire drive housing away from motor gear and insert a piece of standard writing paper (approximate thickness: 0.003 in.; 0.076 mm) between gears.
3. Slide wire drive housing toward motor gear so paper is held in place but can be removed without tearing.
4. Tighten housing mounting bolts and weld cable terminal nuts, and remove paper.

7-3. REINSTALLATION OF HUB ASSEMBLY (Figure 7-1)

If it becomes necessary to replace part or all of the hub assembly, reinstall the new hub assembly as follows:

1. Remove hub assembly from hub support, and disassemble discarding worn or broken parts.
2. Slide the following items onto the hub support shaft in order given:
   a. Fiber Washer
   b. Brake Washer
   c. Hub
   d. Brake Washer
   e. Fiber Washer
   f. Keyed Washer
   g. Spring
   h. Flat Washer
3. Install hex nut onto hub support shaft. Tighten hex nut until a slight drag is felt while turning hub.
4. Install welding wire according to Section 4-9.

7-4. OVERLOAD PROTECTION (Figure 5-1)

WARNING: ELECTRIC SHOCK can kill.

- *Do not touch live electrical parts.*
- *Shut down welding power source, and disconnect input power employing lockout/tagging procedures before inspecting, maintaining, or servicing.*

Lockout/tagging procedures consist of padlocking line disconnect switch in open position, removing fuses from fuse box, or shutting off and red-tagging circuit breaker or other disconnecting device.

INCORRECT FUSE can damage unit.

- *Use only replacement fuse of same size, type, and rating (see Parts List).*

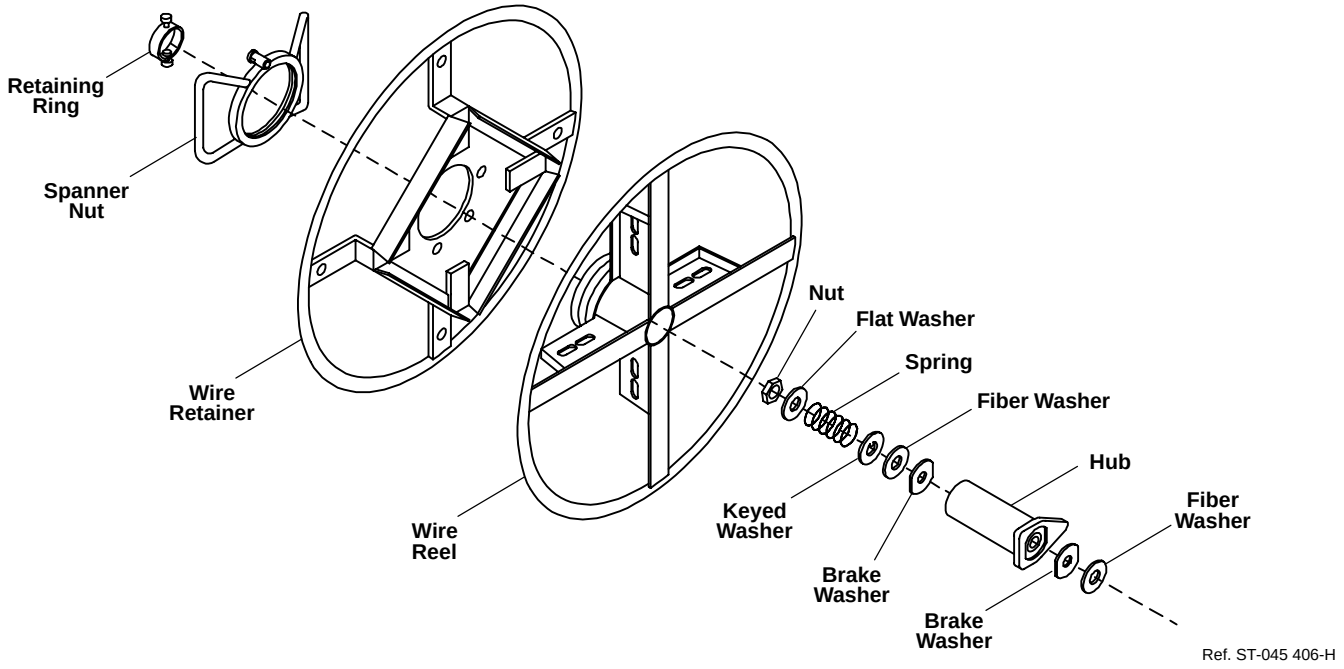

Figure 7-1. Hub And Reel Assemblies

Fuse F1 protects the unit from overload. If fuse F1 should open, the wire feeder would completely shut down. To replace F1, proceed as follows:

1. Depress and rotate fuse holder cover counter-clockwise.
2. Pull out fuse with cover when fuse holder cover is free.
3. Insert new fuse into fuse holder cover.
4. Install new fuse with fuse holder cover back into unit.
5. Depress and rotate fuse holder cover clockwise until cover is secure.

7-5. BRUSH INSPECTION AND REPLACEMENT Figures 7-2 And 7-3)

WARNING: ELECTRIC SHOCK can kill.

- *Do not touch live electrical parts.*
- *Shut down welding power source and disconnect input power employing lockout/tagging procedures before inspecting, maintaining, or servicing.*

Lockout/tagging procedures consist of padlocking line disconnect switch in open position, removing fuses from fuse box, or shutting off and red-tagging circuit breaker or other disconnecting device.

- *Stop engine on welding generator before working on wire feeder.*

DISASSEMBLY OF MOTOR FIELD MAGNETS can result in personal injury and equipment damage.

- *Limit drive motor repairs to brush replacement.*

The field magnets are very strong. If disassembly is attempted, injury to fingers and hands may result from the rotor being drawn back into the motor. The field magnets are matched sets and operation may be affected if the magnets are tampered with. Warranty is void if the motor is tampered with.

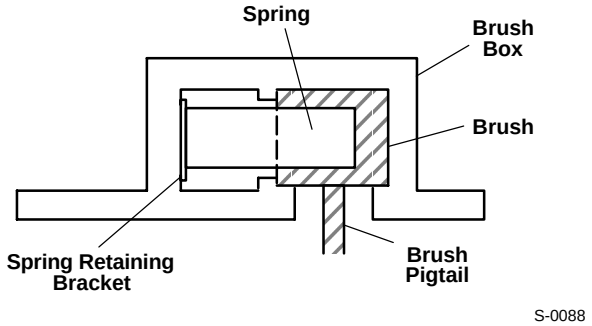

Figure 7-2. View Of Spring Assembly And Brush When Brush Cap Is Opened

1. Open brush cap by sliding screwdriver under catch and lifting. Remove brush cap.
2. Grasp spring retaining bracket with long-nose pliers.
3. Push spring retaining bracket in slightly and move towards brush. This should release the spring assembly and it can be removed.
4. Pull brush out using brush pigtail.
5. If the brushes are less than 1/4 in. (6.4 mm) long, replacement is necessary. Disconnect brush pigtail from brush box tab and remove brush.
6. Connect new brush pigtail to brush box tab.
7. Route pigtail through slot in brush box. Be sure that the pigtail will not come into contact with a metal surface.
8. Insert brush into brush box. Be sure that the low end of the bevel on the top of the brush is towards the spring.
9. Using long-nose pliers, insert spring assembly beside brush sliding the spring retaining bracket along the brush box wall. The spring retaining bracket hooks on the brush box wall as illustrated in Figure 7-3.
10. If the spring retaining bracket is in place, it will be against the brush box wall when pliers are released.
11. Be sure that the spring is in the proper position as shown in Figures 7-2 and 7-3.
12. Replace and latch the brush cap.
13. Reconnect power to all equipment and resume operation.

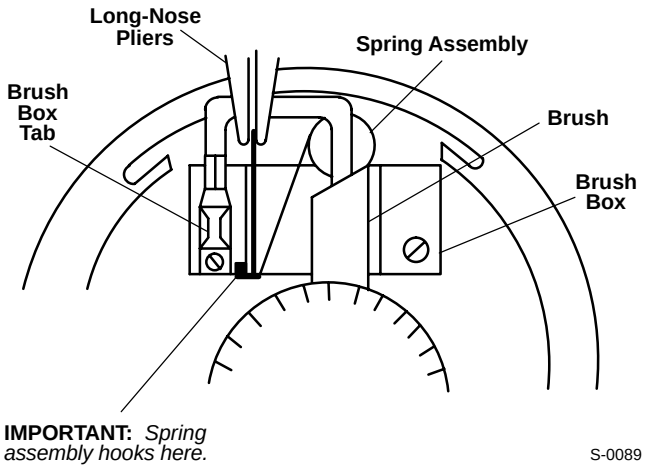

Figure 7-3. View Of Spring Assembly And Brush From Armature End Of Motor

7-6. TROUBLESHOOTING

WARNING: ELECTRIC SHOCK can kill.

- *Do not touch live electrical parts.*
- *Shut down welding power source, and disconnect input power employing lockout/tagging procedures before inspecting, maintaining, or servicing.*

Lockout/tagging procedures consist of padlocking line disconnect switch in open position, removing fuses from fuse box, or shutting off and red-tagging circuit breaker or other disconnecting device.

- *Stop engine on welding generator before working on wire feeder.*

MOVING PARTS can cause serious injury.

- *Keep away from moving parts.*

HOT SURFACES can cause severe burns.

- *Allow cooling period before servicing.*

Troubleshooting to be performed only by qualified persons.

It is assumed that the unit was properly installed according to Section 4 of this manual, the operator is familiar with the function of controls, the wire feeder was working properly, and that the trouble is not related to the welding process. The following table is designed to diagnose and provide remedies for some of the troubles that may develop in this wire feeder.

Use this table in conjunction with the circuit diagram while performing troubleshooting procedures. If the trouble is not remedied after performing these procedures, the nearest Factory Authorized Service Station/ Service Distributor should be contacted. In all cases of equipment malfunction, the manufacturer's recommendations should be strictly followed.

Table 7-2. Troubleshooting

TROUBLE	PROBABLE CAUSE	REMEDY
No weld output or erratic weld output.	Welding power source.	See troubleshooting information in welding power source Owner's Manual.
	Loose connections.	Be sure all weld cable connections are clean and tight.
No wire feed.	Fuse F1.	Replace F1 (see Section 7-4).
	Voltage sensing lead not connected.	Connect voltage sensing lead to the workpiece.
Erratic wire feed.	Loose connections.	Be sure that all weld cable connections are clean and tight. Be sure voltage sensing lead is connected to the workpiece.
	ARC LENGTH control R1.	Be sure connections to R1 are clean and tight. Check for proper rotation of brushes. Replace if necessary.
Motor runs slowly while welding.	Control relay CR1.	Check CR1 operation and replace if necessary.
	Welding power source.	See troubleshooting information in welding power source Owner's Manual.
Wire retracts into the gun when trying to strike and arc.	POLARITY switch S2 position.	Be sure S2 position corresponds to the weld output connections.
Motor continues to run after the arc is broken.	Control Relay CR1.	Check CR1 operation and replace if necessary.

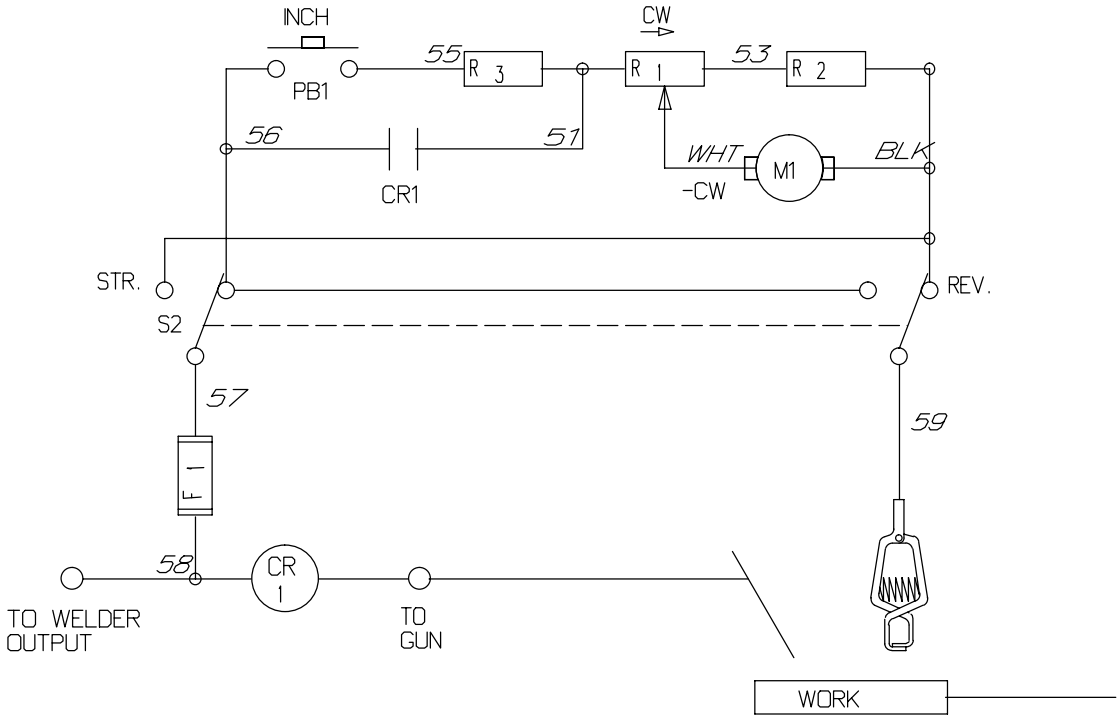

Circuit Diagram No. SA-150 528-B

Diagram 8-1. Circuit Diagram

Notes

☞ *Hardware is common and not available unless listed.*

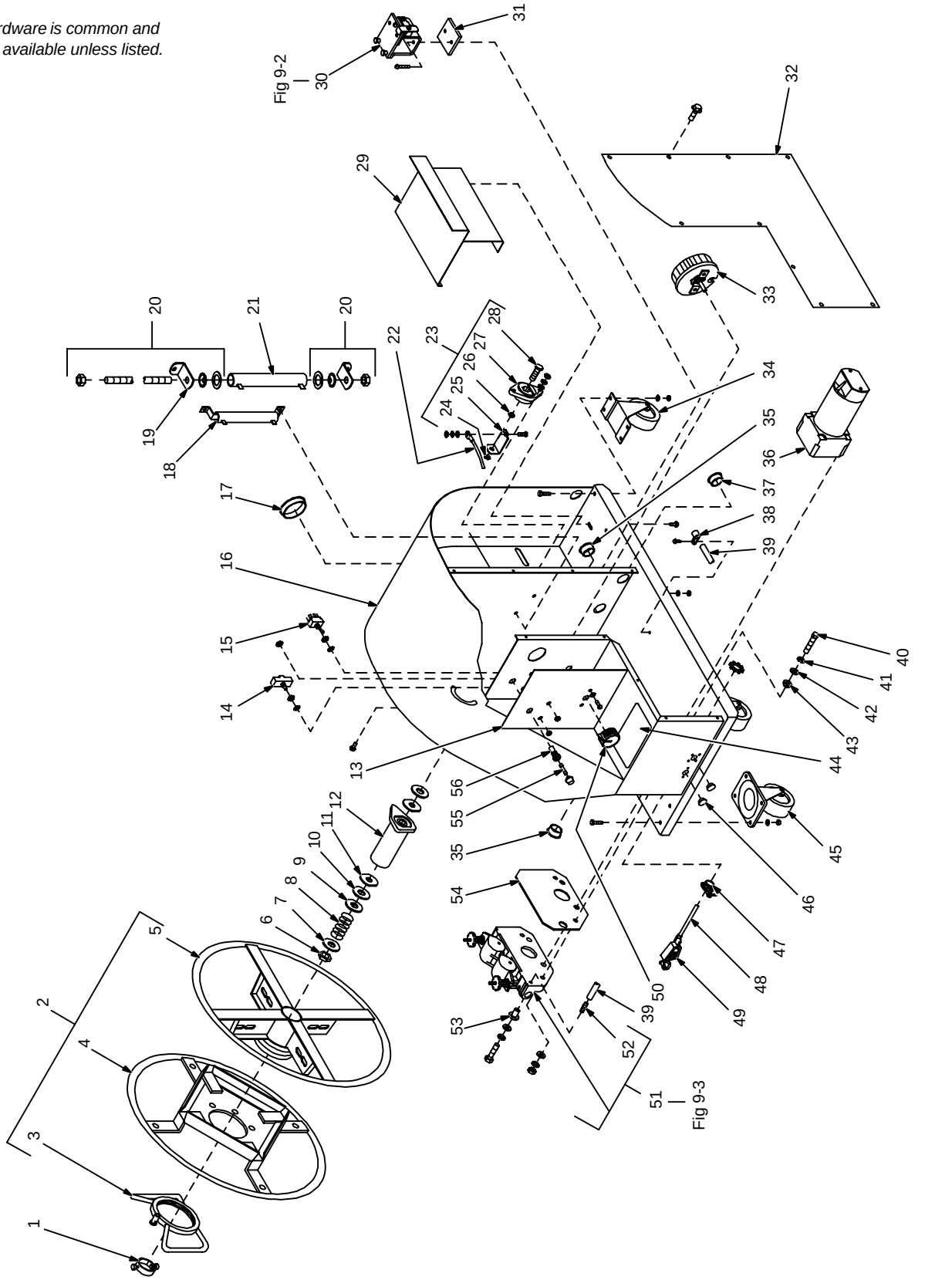

Figure 9-1. Main Assembly

Item No.	Dia. Mkgs.	Part No.	Description	Quantity
			Figure 9-1. Main Assembly	
1		058 427	RING, retaining spool	1
2		108 008	REEL, wire 60 lb. (consisting of)	1
3		168 103	NUT, spanner retaining	1
4		+168 104	RETAINER, spool support (consisting of)	1
		166 594	LABEL, caution falling wire reel can cause damage	1
5		124 900	SUPPORT, reel spool	1
6		085 980	NUT, stl hex full fnsh .625-11	1
7		605 941	WASHER, flat stl .640 ID x 1.000 OD x 14ga thk	1
8		010 233	SPRING, cprsn .970 OD x .120 wire x 1.250	1
9		057 971	WASHER, flat stl keyed 1.500dia x .125thk	1
10		010 191	WASHER, fbr .656 ID x 1.500 OD x .125thk	2
11		058 628	WASHER, brake stl	2
12		058 428	HUB, spool	1
13			NAMEPLATE, (order by model and serial number)	1
14	PB1	047 681	SWITCH, mag blwt 18 oz panel mtg	1
15	S2	011 611	SWITCH, tgl DPDT 15A 125V	1
16		+096 326	BASE	1
17		004 214	BUSHING, snap-in nyl 1.625 ID x 2.000mtg hole	1
18	R3	073 336	RESISTOR, WW fxd 300W 8 ohm	1
19		605 742	CLIP, mtg resistor .500 ID core	2
20		++046 893	HARDWARE, mounting resistor 300W	2
21	R2	091 492	RESISTOR, WW fxd 100W 3 ohm	1
22		600 323	CABLE, weld cop strd No. 3/0 (order by ft)	3ft
23		039 047	TERMINAL, pwr output red (consisting of)	1
24		601 879	NUT, stl hex full fnsh .500-13	1
25		039 044	BUS BAR, term bd	1
26		601 880	NUT, stl hex jam .500-13	1
27		039 049	TERMINAL BOARD, red	1
28		601 976	SCREW, cap stl hexhd .500-13 x 1.500	1
29		044 091	TRAY, tool	1
30		148 730	SWITCH, magnetic blowout (Fig 9-2)	1
31		142 695	BAR, mtg blowout switch	1
32		096 332	PANEL, side	1
33	R1	603 942	RHEOSTAT, WW 150W 5 ohm	1
34		138 049	CASTER, rbr sta 3 in bolt down	2
35		057 357	BUSHING, snap-in nyl .937 ID x 1.125mtg hole	2
36	M1	150 529	MOTOR, gear 1/12hp 32VDC 1950RPM (consisting of)	1
		154 019	COVER, brush	2
		080 282	SPRING, brush	2
		*045 612	BRUSH	2
37		047 838	BLANK, snap-in nyl 1.000mtg hole	1
38		010 144	CLAMP, nyl .437 clamp dia	1
39		134 834	HOSE, SAE .187 ID x .410 OD (order by ft)	3ft
40		601 965	SCREW, cap stl hexhd .375-16 x 1.000	1
41		602 213	WASHER, lock stl split .375	2
42		010 910	WASHER, flat stl SAE .375	2
43		075 150	WASHER, shldr nyl 1.000 OD x .375 ID	2
44		134 464	LABEL, warning general precautionary	1
45		073 310	CASTER, rbr swvl 3 in bolt down	2
46		000 527	BLANK, snap-in nyl .875mtg hole	2
47		115 104	CONNECTOR, clamp cable .500	1
48		600 399	WIRE, strd 14ga bk 600V (order by ft)	15ft
49		601 222	CLAMP, univ 50A	1
50		097 926	KNOB, pointer	1
51		Fig 9-3	WIRE DRIVE & GEARS, (consisting of)	1
52		144 172	FITTING, brs barbed M 3/16tbg x .250-20	1
53		072 010	WASHER, shldr nyl .437 OD x .316 ID x .187	2
54		096 333	INSULATOR, motor	1
55	F1	*012 655	FUSE, mintr cer 10A 250V	1
56		046 432	HOLDER, fuse mintr .250 x 1.250 panel mtg	1

+When ordering a component originally displaying a precautionary label, the label should also be ordered.
++Part No. includes all hardware for mounting (1) resistor.
*Recommended Spare Parts.

To maintain the factory original performance of your equipment, use only Manufacturer's Suggested Replacement Parts. Model and serial number required when ordering parts from your local distributor.

Dia. Mkgs.	Part No.	Description	Quantity
		Optional Equipment	
	046 820	REMOTE WIRE INCHING CONTROL, (consisting of)	1
PB50	047 681	SWITCH, mag blwt 18 oz panel mtg	1
	045 434	CHASSIS, switch remote inch control	1
	045 433	WRAPPER, remote inch control	1
	010 476	BUSHING, strain relief .625 ID x .570mtg hole	1
	007 826	CABLE, port No. 18 3/c (order by ft)	18ft
	046 863	METER KIT, volt dc (consisting of)	1
V	025 637	METER, VDC 0-50 scale 2.5 in	1
	046 865	GAS SOLENOID VALVE, (consisting of)	1
F2	*012 643	FUSE, mintr gl slo-blo 1A	1
	046 432	HOLDER, fuse mintr .250 x 1.250 panel mtg	1
GS1	003 538	VALVE, 115VAC 2 way 1/4 IPS port 1/8 orf out	1
	025 212	MOUNTING PAD, solenoid	1
	010 604	FITTING, hose brs bushing 1/4NPT x .625-18RH	1
	602 958	FITTING, brs barbed M 1/4tbg x 1/4NPT	1
	000 434	FITTING, gas	1
	604 550	HOSE, nprn brd No. 1 x .187 ID (order by ft)	2ft
	056 108	FITTING, hose brs ferrule .425 ID x .718 lg	1
	010 606	FITTING, hose brs nut .625-18RH	1
	056 851	FITTING, hose brs barbed nipple 3/16tbg	1
PLG1	073 690	PLUG, str grd armd 2P3W 15A 125V	1
	007 826	CABLE, port No. 18 3/c (order by ft)	17ft
	010 476	BUSHING, strain relief .625 ID x .570mtg hole	1
RC1	048 282	RECEPTACLE w/SOCKETS, (consisting of)	1
	079 534	TERMINAL, female 1skt 18-14 wire	4
T1	036 135	TRANSFORMER, control 115/24VAC 50/60Hz	1
	057 357	BUSHING, snap-in nyl .937 ID x 1.125mtg hole	1

*Recommended Spare Parts.

To maintain the factory original performance of your equipment, use only Manufacturer's Suggested Replacement Parts. Model and serial number required when ordering parts from your local distributor.

Item No.	Dia. Mkgs.	Part No.	Description	Quantity

Figure 9-2. Switch, Magnetic Blowout (Fig 9-1 Item 30)

1		139 392	PIN, hinge	2
2		139 393	SPRING, cprsn .300 OD x .026 wire x .437	2
3		071 029	COVER, top switch actuator	1
4		112 896	SPRING, cprsn .240 OD x .020 wire x .437pld	1
5	CR1	047 680	SWITCH, mag blwt 18 oz	1
6		148 700	STOP, plate switch	1
7		071 031	BRACKET, mtg switch	1
8		070 587	TUBING, gl acrylic No. 4 (order by ft)	1ft
9		075 552	WASHER, lock brz split .250	1
10		082 165	SCREW, mach brs rdh .250-20 x 2.000	1
11		058 968	RING, retainer E	2

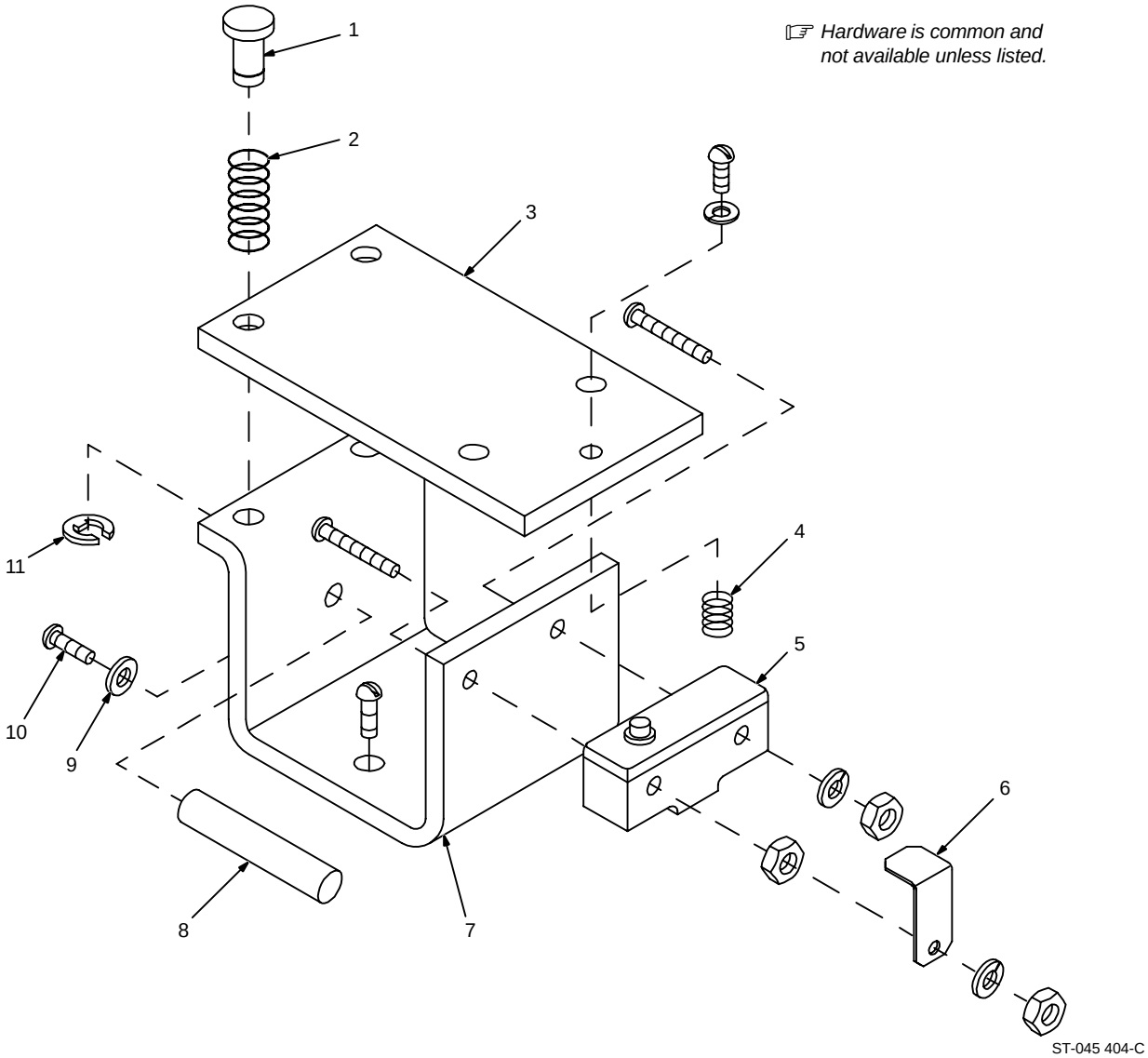

Figure 9-2. Switch, Magnetic Blowout

To maintain the factory original performance of your equipment, use only Manufacturer's Suggested Replacement Parts. Model and serial number required when ordering parts from your local distributor.

Item No.	Part No.	Description	Quantity

Figure 9-3. Wire Drive & Gears (Fig 9-1 Item 51)

1	096 359	DRIVE ASSEMBLY, (consisting of)	1
2	166 072	SPACER, gear	4
3	602 154	SCREW, .250-20 x .500 hx whd slffmg	2
4	010 224	PIN, spring CS .187 x 1.000	2
5	096 330	HOUSING, adapter gun/feeder	1
6	085 242	FASTENER, pinned	2
7	085 244	WASHER, cupped stl .328 ID x .812 OD x .125 lip	2
8	010 231	SPRING, cprsn .770 OD x .105 wire x 1.225	2
9	085 243	KNOB, adj tension	2
10	166 071	LEVER, mtg pressure gear	1
11	079 634	PIN, hinge	1
12	151 828	PIN, cotter hair .054 x .750	2
13	166 338	LEVER, mtg pressure gear	1
14	172 075	CARRIER, drive roll w/components 24 pitch	4
15	602 009	SCREW, 250-20 x 1.25 soc hd-hex GR8 PLN	4
16	604 538	WASHER, flat stl SAE .312	1
17	124 778	KNOB, plstc T 1.000 lg x .312-18 x 2.000 bar	1
18	121 271	SCREW, 250-20 x .50 soc hd-hex GR8 PLN	1
19	155 467	WASHER, quick change	1
20	172 077	CARRIER, drive roll keyed 24 pitch	1
21	079 625	WASHER, spring stl .500 shakeproof	2

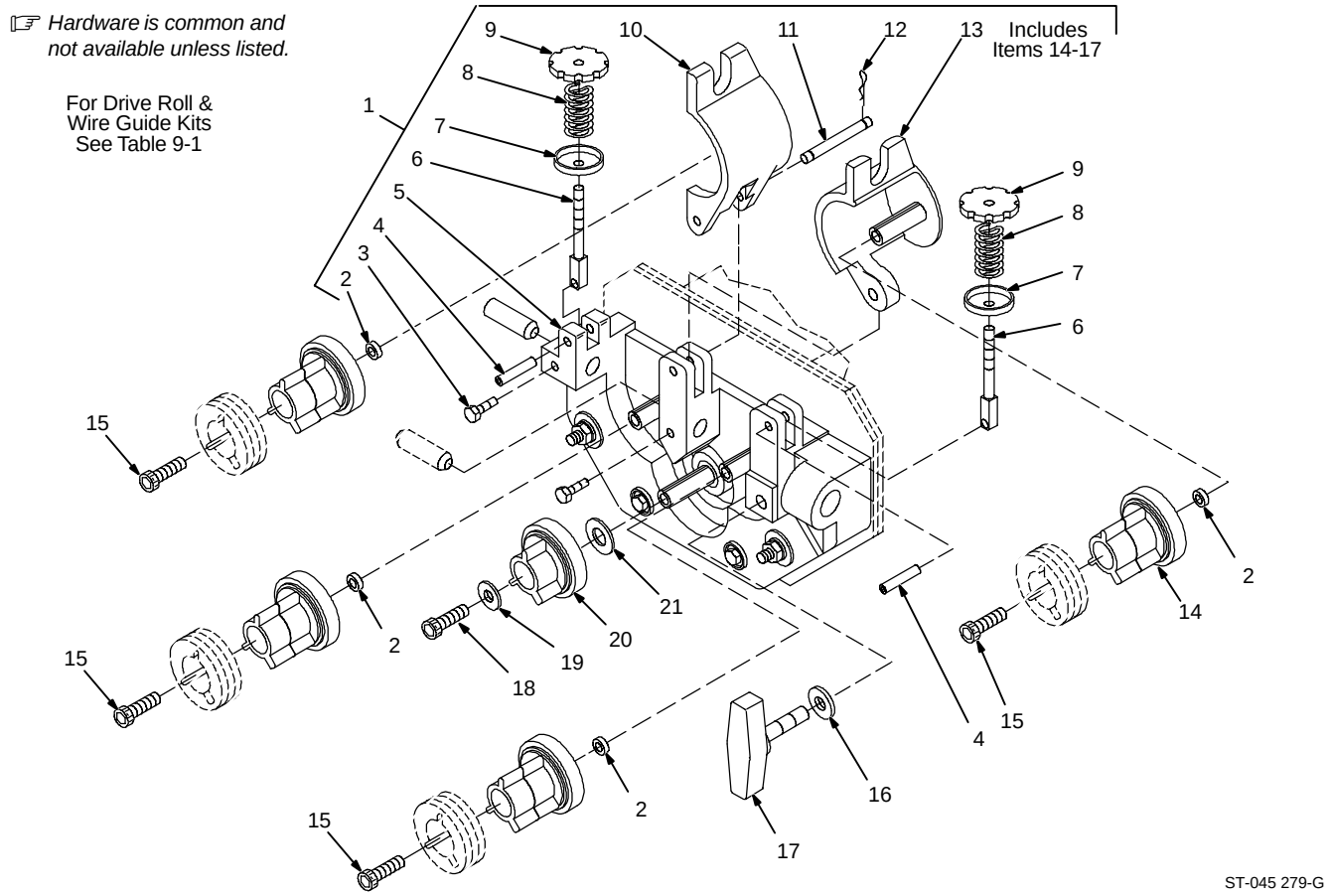

Figure 9-3. Wire Drive & Gears

To maintain the factory original performance of your equipment, use only Manufacturer's Suggested Replacement Parts. Model and serial number required when ordering parts from your local distributor.

Table 9-1. Drive Roll & Wire Guide Kits

NOTE ☞

Base selection of drive rolls upon the following recommended usages:

1. *V-Grooved rolls for hard wire.*
2. *U-Grooved rolls for soft and soft shelled cored wires.*
3. *U-Cogged rolls for extremely soft shelled wires (usually hard surfacing types).*
4. *V-Knurled rolls for hard shelled cored wires.*
5. *Drive roll types may be mixed to suit particular requirements (example: V-Knurled roll in combination with U-Grooved).*

Wire Diameter			Kit No.	Drive Roll		Wire Guide	
Fraction	Decimal	Metric		Part No.	Type	Inlet	Intermediate
1/16 in	.062 in	1.6 mm	046 787	053 706	U-Grooved	056 195	056 209
5/64 in	.079 in	2.0 mm	046 788	053 704	U-Grooved	056 195	056 209
3/32 in	.094 in	2.4 mm	046 789	053 703	U-Grooved	056 196	056 210
7/64 in	.110 in	2.8 mm	046 790	053 705	U-Grooved	056 196	056 210
1/8 in	.126 in	3.2 mm	046 791	053 707	U-Grooved	056 197	056 211
1/16 in	.062 in	1.6 mm	046 795	132 955	V-Knurled	056 195	056 209
5/64 in	.079 in	2.0 mm	046 796	132 960	V-Knurled	056 195	056 209
3/32 in	.094 in	2.4 mm	046 797	132 961	V-Knurled	056 196	056 210
7/64 in	.110 in	2.8 mm	046 798	132 962	V-Knurled	056 196	056 210
1/8 in	.126 in	3.2 mm	046 799	132 963	V-Knurled	056 197	056 211
.068-.072 in	.068-.072 in	1.8 mm	089 985	132 959	V-Knurled	056 195	056 209
1/16 in	.062 in	1.6 mm	046 800	053 708	U-Cogged	056 195	056 209
5/64 in	.079 in	2.0 mm	046 801	053 710	U-Cogged	056 195	056 209
3/32 in	.094 in	2.4 mm	046 802	053 709	U-Cogged	056 196	056 210
7/64 in	.110 in	2.8 mm	046 803	053 711	U-Cogged	056 196	056 210
1/8 in	.126 in	3.2 mm	046 804	053 712	U-Cogged	056 197	056 211

Ref. S-0025-D

Notes

Warranty Questions?

Call
1-800-4-A-MILLER
for your local
Miller distributor.

Your distributor also gives you ...

Service
You always get the fast, reliable response you need. Most replacement parts can be in your hands in 24 hours.

Support
Need fast answers to the tough welding questions? Contact your distributor. The expertise of the distributor and Miller is there to help you, every step of the way.

Miller
The Power of Blue.

TRUE BLUE® WARRANTY

Effective January 1, 2000
(Equipment with a serial number preface of “LA” or newer)

This limited warranty supersedes all previous Miller warranties and is exclusive with no other guarantees or warranties expressed or implied.

LIMITED WARRANTY – Subject to the terms and conditions below, Miller Electric Mfg. Co., Appleton, Wisconsin, warrants to its original retail purchaser that new Miller equipment sold after the effective date of this limited warranty is free of defects in material and workmanship at the time it is shipped by Miller. THIS WARRANTY IS EXPRESSLY IN LIEU OF ALL OTHER WARRANTIES, EXPRESS OR IMPLIED, INCLUDING THE WARRANTIES OF MERCHANTABILITY AND FITNESS.

Within the warranty periods listed below, Miller will repair or replace any warranted parts or components that fail due to such defects in material or workmanship. Miller must be notified in writing within thirty (30) days of such defect or failure, at which time Miller will provide instructions on the warranty claim procedures to be followed.

Miller shall honor warranty claims on warranted equipment listed below in the event of such a failure within the warranty time periods. All warranty time periods start on the date that the equipment was delivered to the original retail purchaser, or one year after the equipment is sent to a North American distributor or eighteen months after the equipment is sent to an International distributor.

1. 5 Years Parts – 3 Years Labor
   * Original main power rectifiers
   * Inverters (input and output rectifiers only)
2. 3 Years — Parts and Labor
   * Transformer/Rectifier Power Sources
   * Plasma Arc Cutting Power Sources
   * Semi-Automatic and Automatic Wire Feeders
   * Inverter Power Supplies
   * Intellitig
   * Engine Driven Welding Generators
     (NOTE: Engines are warranted separately by the engine manufacturer.)
3. 1 Year — Parts and Labor
   * DS-2 Wire Feeder
   * Motor Driven Guns (w/exception of Spoolmate 185 & Spoolmate 250)
   * Process Controllers
   * Positioners and Controllers
   * Automatic Motion Devices
   * RFCS Foot Controls
   * Induction Heating Power Sources
   * Water Coolant Systems
   * HF Units
   * Grids
   * Maxstar 140
   * Spot Welders
   * Load Banks
   * Miller Cyclomatic Equipment
   * Running Gear/Trailers
   * Plasma Cutting Torches (except APT & SAF Models)
   * Field Options
     (NOTE: Field options are covered under True Blue® for the remaining warranty period of the product they are installed in, or for a minimum of one year — whichever is greater.)
4. 6 Months — Batteries
5. 90 Days — Parts
   * MIG Guns/TIG Torches
   * Induction Heating Coils and Blankets
   * APT, ZIPCUT & PLAZCUT Model Plasma Cutting Torches
   * Remote Controls
   * Accessory Kits
   * Replacement Parts (No labor)
   * Spoolmate 185 & Spoolmate 250
   * Canvas Covers

Miller’s True Blue® Limited Warranty shall not apply to:

1. **Consumable components; such as contact tips, cutting nozzles, contactors, brushes, slip rings, relays or parts that fail due to normal wear.**
2. Items furnished by Miller, but manufactured by others, such as engines or trade accessories. These items are covered by the manufacturer’s warranty, if any.
3. Equipment that has been modified by any party other than Miller, or equipment that has been improperly installed, improperly operated or misused based upon industry standards, or equipment which has not had reasonable and necessary maintenance, or equipment which has been used for operation outside of the specifications for the equipment.

MILLER PRODUCTS ARE INTENDED FOR PURCHASE AND USE BY COMMERCIAL/INDUSTRIAL USERS AND PERSONS TRAINED AND EXPERIENCED IN THE USE AND MAINTENANCE OF WELDING EQUIPMENT.

In the event of a warranty claim covered by this warranty, the exclusive remedies shall be, at Miller’s option: (1) repair; or (2) replacement; or, where authorized in writing by Miller in appropriate cases, (3) the reasonable cost of repair or replacement at an authorized Miller service station; or (4) payment of or credit for the purchase price (less reasonable depreciation based upon actual use) upon return of the goods at customer’s risk and expense. Miller’s option of repair or replacement will be F.O.B., Factory at Appleton, Wisconsin, or F.O.B. at a Miller authorized service facility as determined by Miller. Therefore no compensation or reimbursement for transportation costs of any kind will be allowed.

TO THE EXTENT PERMITTED BY LAW, THE REMEDIES PROVIDED HEREIN ARE THE SOLE AND EXCLUSIVE REMEDIES. IN NO EVENT SHALL MILLER BE LIABLE FOR DIRECT, INDIRECT, SPECIAL, INCIDENTAL OR CONSEQUENTIAL DAMAGES (INCLUDING LOSS OF PROFIT), WHETHER BASED ON CONTRACT, TORT OR ANY OTHER LEGAL THEORY.

ANY EXPRESS WARRANTY NOT PROVIDED HEREIN AND ANY IMPLIED WARRANTY, GUARANTY OR REPRESENTATION AS TO PERFORMANCE, AND ANY REMEDY FOR BREACH OF CONTRACT TORT OR ANY OTHER LEGAL THEORY WHICH, BUT FOR THIS PROVISION, MIGHT ARISE BY IMPLICATION, OPERATION OF LAW, CUSTOM OF TRADE OR COURSE OF DEALING, INCLUDING ANY IMPLIED WARRANTY OF MERCHANTABILITY OR FITNESS FOR PARTICULAR PURPOSE, WITH RESPECT TO ANY AND ALL EQUIPMENT FURNISHED BY MILLER IS EXCLUDED AND DISCLAIMED BY MILLER.

Some states in the U.S.A. do not allow limitations of how long an implied warranty lasts, or the exclusion of incidental, indirect, special or consequential damages, so the above limitation or exclusion may not apply to you. This warranty provides specific legal rights, and other rights may be available, but may vary from state to state.

In Canada, legislation in some provinces provides for certain additional warranties or remedies other than as stated herein, and to the extent that they may not be waived, the limitations and exclusions set out above may not apply. This Limited Warranty provides specific legal rights, and other rights may be available, but may vary from province to province.

Owner's Record

Please complete and retain with your personal records.

Model Name Serial/Style Number

Purchase Date (Date which equipment was delivered to original customer.)

Distributor

Address

City

State Zip

For Service

Call 1-800-4-A-Miller or see our website at www.MillerWelds.com to locate a DISTRIBUTOR or SERVICE AGENCY near you.

Always provide Model Name and Serial/Style Number.

Contact your Distributor for:

- Welding Supplies and Consumables
- Options and Accessories
- Personal Safety Equipment
- Service and Repair
- Replacement Parts
- Training (Schools, Videos, Books)
- Technical Manuals (Servicing Information and Parts)
- Circuit Diagrams
- Welding Process Handbooks

Contact the Delivering Carrier for:

File a claim for loss or damage during shipment.

For assistance in filing or settling claims, contact your distributor and/or equipment manufacturer's Transportation Department.

Miller Electric Mfg. Co.
An Illinois Tool Works Company
1635 West Spencer Street
Appleton, WI 54914 USA

International Headquarters–USA
USA Phone: 920-735-4505 Auto-Attended
USA & Canada FAX: 920-735-4134
International FAX: 920-735-4125

European Headquarters – United Kingdom
Phone: 44 (0) 1204-593493
FAX: 44 (0) 1204-598066

www.MillerWelds.com

PRINTED IN USA

© 2000 Miller Electric Mfg. Co. 6/00